CUSTOMER'S NAME

員享

ALPHA REFERENCE NO.
SP05020105

SPECIFICATION

PART NO.	ALPHA MODEL NAME
1.	RV16A01-20-20K-M10K-3C

MODEL NAME
MODEL NO.

APPROVAL

PREPARED BY	REVIEWED BY	APPROVED BY
蔡 94.2.15 香鑾	何 94.2.15 建志	王 94.2.15 茂松

ALPHA

台灣艾華電子工業股份有限公司
桃園市中正路1221~1223號9樓

TAIWAN ALPHA ELECTRONIC CO., LTD.
9F, NO. 1221, Chung Cheng Rd., Taoyuan, Taiwan
TEL:886-3-3577799 FAX:886-3-3577700
E-mail:sales@taiwanalpha.com.tw
URL:http://www.taiwanalpha.com

SLH-004-6

THIRD ANGLE PROJECTION

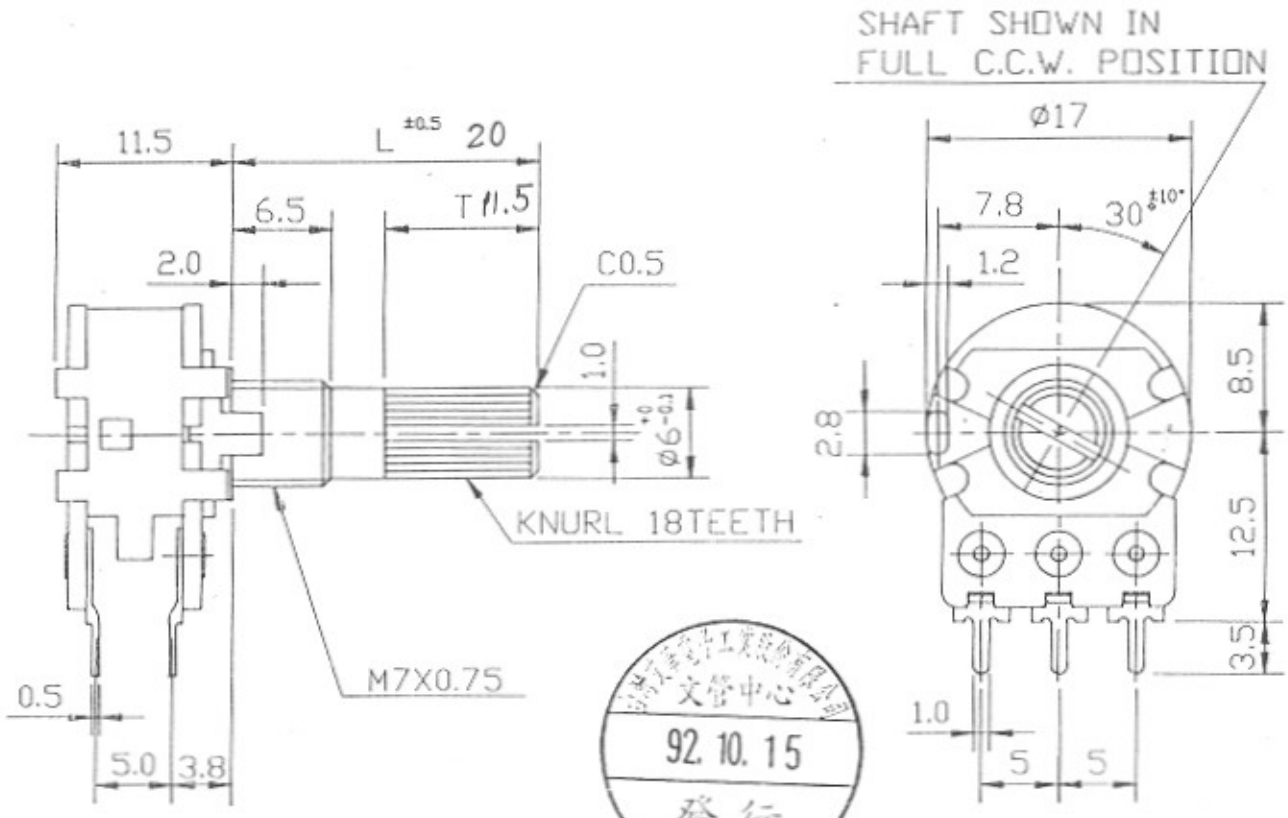

文管中心
92. 10. 15
發行

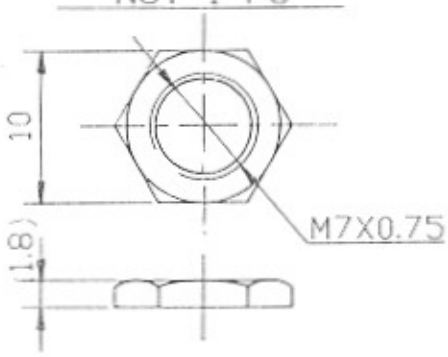

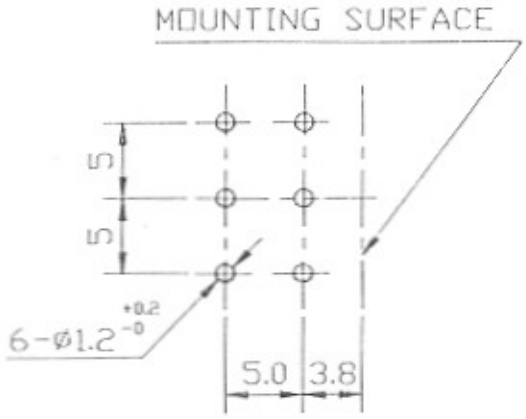

MOUNTING HOLE DETAIL

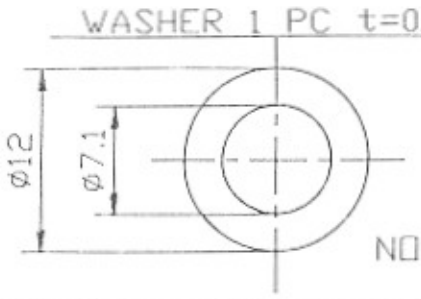

NOTE:
BUSHING MATERIAL IS ZINC ALLOY DIECASTING.

No.	DATE	DESCRIPTION	PART No.	NAME	
					-(3D)
	92.10.14	增加00號	H0		-(3C)(3X4)
	92.4.7	增加00號	H0		-(3F)(3XXX)
	92.3.6	增加00號	H0	RV16A01-20- K-	-3
					-(3E)

TOL. UNLESS OTHERWISE STATED			DIMENSION	SCALE	DRAWN BY	CHECKED BY	APPROVED BY	DRAWING No.
less than	10	-0.3	mm	2	江 87.12.2 進三	江 87.12.2 進三	王 87.12.2 建和	
above	10~30	-0.5						
above	30~100	-1.0		1				
above		-5°						

TAIWAN ALPHA ELECTRONIC CO., LTD.

RV16A01

16φ單軸雙連迴轉式VR規格書
SPECIFICATIONS OF VARIABLE RESISTOR

一、機械規格
MECHANICAL CHARACTERISTICS:

1.1 全迴轉角度： 300±5度
OVERALL ROTATION ANGLE:300±5°

1.2 迴轉轉矩：20～200 gf-cm (迴轉速度60度/1 秒)
OPERATION TORQUE: 20～200 gf-cm. (ROTATIONAL SPEED 60° /1 sec)

1.3 起動迴轉轉矩:450gf-cm 以下.
STARTING TORQUE:450gf-cm MAX.

1.4 軸鬆動：固定腳焊錫後軸前端加上 500 gf-cm之力矩,於軸前端移動之 0.7 xL/30mm P-P 以內.
PLAY OF SHAFT:THE RESISTOR SHALL BE MOUNTED BY SOLDERING THE MOUNTING LEGS ON THE PANEL, AND AN END THRUST OF 500gf-cm AT THE END OF THE SHAFT SHALL BE APPLIED. THEN THE TOTAL PLAY OF THE SHAFT SHALL BE NOT EXCEED 0.7xL/30mm P-P

1.5 軸擠壓引張強度:焊錫後擠壓,引張耐8kg，3秒(指施加於垂直軸之端面而言)不可有電氣或機械上的異常.
STRENGTH OF SHAFT AGAINST END THRUST:
THE SHAFT SHALL WITHSTAND AGAINST END THRUST OF NOT LESS THAN 8Kgf FOR 3 SECONDS.

1.6 軸之迴轉止動強度：6Kgf-cm以上.
SHAFT END STOP STRENGTH: 6Kgf-cm MIN.

1.7 軸橫擠壓強度：焊錫後軸前端垂直方向耐3Kgf-cm, 3秒後不可有電氣或機械上的異常.(1.6，1.7項並不包含焊錫部位之浮起)
ROBUTNESS OF SHAFT AGAINST SIDE THRUST:
THE SHAFT SHALL WITHSTAND AGAINST SIDE THRUST OF NOT LESS THAN 3Kgf-cm FOR 3 SECONDS ON THE END OF THE SHAFT AT RIGHT ANGLES TO THE AXIS OF THE SHAFT AFTER MOUNTING THE RESISTOR BY SOLDERING.

1.8 焊錫耐熱性：焊錫後(300℃以下，3秒以內)不可發生顯著之鬆動接觸不良
RESISTANCE TO SOLDERING HEAT:
AFTER SOLDERING (LESS THAN 300℃ AND QUICKER THAN 3 SECONDS) THERE SHALL BE NO EVIDENCE OF POOR CONTACT BETWEEN RESISTANCE ELLEMENT AND TERMINALS, OR ANY PHYSICAL DAMAGES AS A RESULT OF THE TEST.

1.9 軸承螺絲固定強度：7Kgf-cm 以上.
BUSHING MOUNT STRENBTH: 7Kgf-cm MIN.

1.10 CLICK位置:150±5°.
POSITION OF CLICK:150° ±5° .

1.11 CLICK脫出力:30～250 gf-cm.
TORQUE OF CLICK: 30～250 gf-cm.

☆(1.10 ,1.11 僅適用於附 CLICK 時)
(1.10 ,1.11 IS USED FOR CLICK ONLY)

二、電氣規格：
ELECTRICAL CHARACTERISTICS:

2.1 全阻值： 阻值適用範圍 5KΩ～1MΩ(容許差±20%)
OVERALL RESISTANCE RANGE: 5KΩ～1MΩ(TOLERANCE±20%)

2.2 額定功率：B 線性 0.125W. B 以外線性 0.06W.
POWER RATING: B TAPER 0.125W. B OTHER 0.06W.

2.3 殘留阻值：1-2端子/2-3端子同.
RESIDUAL RESISTANCE:terminal 1-2/2-3

公稱阻抗值(KΩ) OVERALL RESISTANCE(KΩ)	殘留阻值(Ω) MAXIMUM ATTENUATION LEVEL(Ω)
R≦ 20	10以下 10MAX
20＜R≦ 100	20以下 20MAX
100＜R≦ 1M	50以下 50MAX

2.4 阻抗變化特性 TAPER :

阻抗變化特性 Taper	測定角度 Test point	端子1-2間輸出電壓 V1-2 / 端子1-3間輸入電壓 V1-3 (%)	端子2-3間輸出電壓 V2-3 / 端子1-3間輸入電壓 V1-3 (%)
A	150°	10-25	
B	150°	40-60	
* C	* 150°		10-25
D	150°	2-15	
* E	* 150°		15-35
K	150°	15-35	
W	90±5°	5-15	
	150°	40-60	
	210±5°	85-95	
M (R1)	75±5°	40-60	
	150°	98-100	
* N (R2)	*75±5°		40-60
	*150°		98-100
* RD	* 150°		2-15

註)*記號表示自第三端子測起 *WITH RESPECT TO TERMINAL 3

2.5 轉動雜音：依JIS測定法 47mV以下.(W :200mv以下).
ROTATION NOISE (REFER TO JIS): 47mV MAX. (W :200mV MAX).

2.6 絕緣阻抗：D.C 500V須在100MΩ以上
INSULATION RESISTANCE:100MIN. AT D.C 500 VOLTS

2.7 耐電壓:A.C 500V可耐1分鐘以上
DIELECTRIC TEST:UNITS SHALL BE DESIGNED TO WITHSTAND 500 VOLTS BETWEEN RESISTANCE ELEMENTS AND CASE FOR A PERIOD OF ONE MINUTE WITHOUT DAMAGE OR ARCING.

2.8 最高使用電壓:A.C.200V.
MAXIMUM OPERATING VOLTAGE:200V A.C

2.9 連動誤差:在前,後段的1-3端子間加1KHZ,2V的電壓,以前段為基準,1-2端(*2-3)端子間的輸出測定.
TRACKING ERROR:APPLY 2V (1KHZ) ACROSS TERMINALS 1 AND 3 OF THE FRONT AND REAR SECTIONS MEASURE THE OUTPUT LEVEL ACROSS TERMINALS 1 AND 2 (*2 AND 3)WITH REFERENCE TO THAT OF THE FRONT SECTION.

A,B,D,W,K. *C,*E,*RD.	音量用 -40dB ～ 0dB	3dB以內
	音質用,迴轉角度150° 位置	2dB以內
	For Volume control -40dB～ 0dB	3dB MAX
(M,N)無規定(NOT SPECIFIED)	Tone control at center position	2dB MAX

三、耐久性能
ENDURANCE CHARACTERISTICS:
3.1 電阻體迴轉壽命特性:15,000迴轉以上
ROTATIONAL LIFE:MORE THAN 15,000 CYCLES

四、其它之性能 依照JISC 6443普通級碳素系可變電阻器
NOTE MEET OR EXCEED JISC 6443 REQUIREMENTS.

STANDARD RESISTANCE TAPER

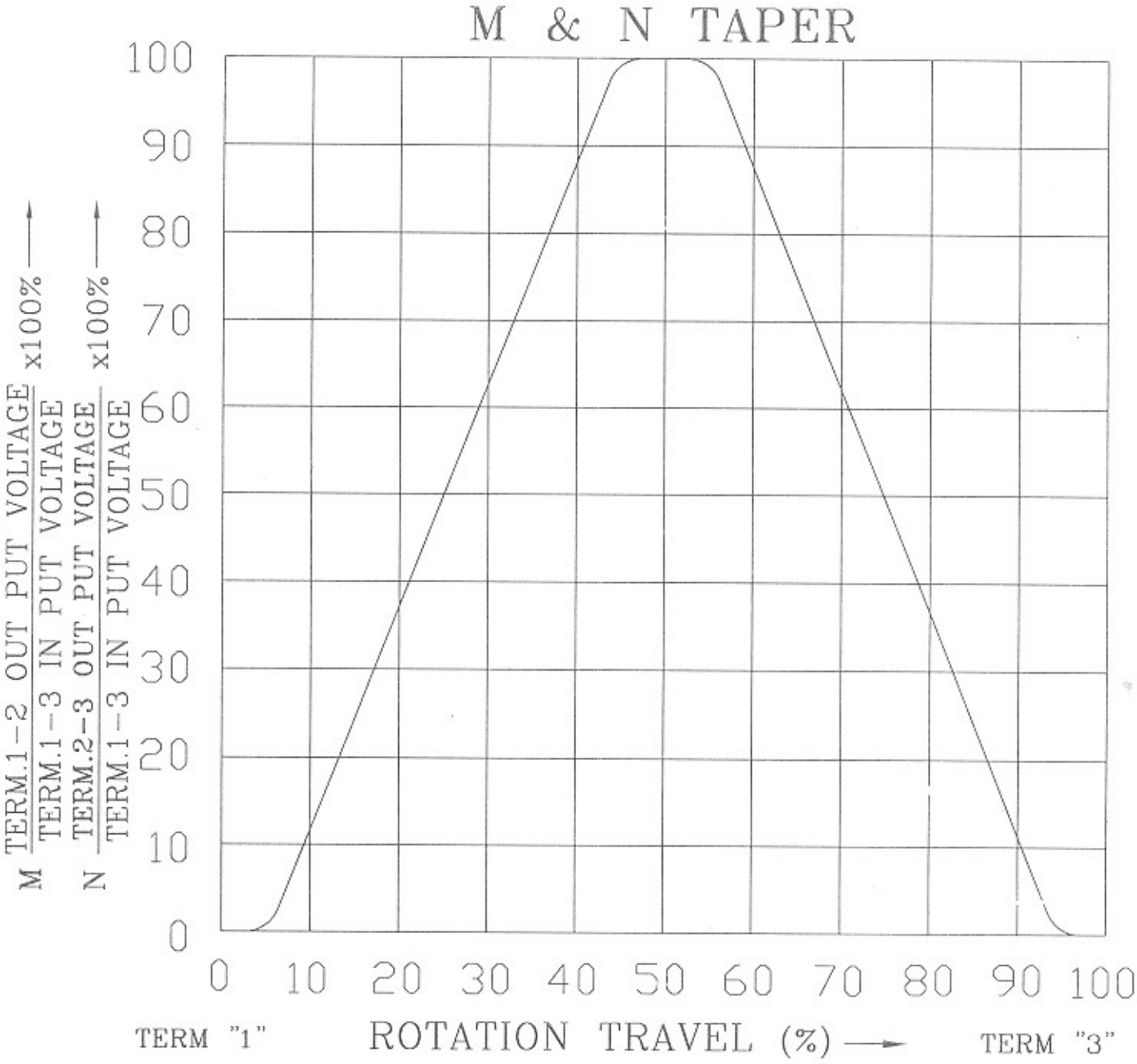

NO.	DATE	DESCRIPTION	MODEL NAME

TOL. UNLESS OTHERWISE STATED	DIMENSION	SCALE	DRAWN BY	CHECKED BY	APPROVED BY	DRAWING NO.
less than 10 ±0.3 above 10 ~ 30 ±0.5 above 30 ~100 ±1.0 above ±5°	mm		何 90.8.21 建志	王 90.8.21 茂松	王 90.8.21 茂松	

TAIWAN ALPHA ELECTRONIC CO., LTD.

Common Specification of Variable Resistor
VR 共通規格書

1 Condition of soldering
銲錫條件

Soldering shall be certified with following condition.
作銲錫處理時，請確保在下列工作條件。

1-1 Substrate to be soldered: Copper clad laminated phenol board in one surface of 1.6mm thickness.
使用基板：t 1.6 厚單面銅箔積層板。

1-2 Solder Flux: Flux of 0.82 specific weight in bubbling type solder flux coating apparatus shall be used and bubbling surface height shall be defined substantially as half thickness of substrate. Flux shall not flow up on the substrate surface.
助銲劑：使用發泡式比重 0.82 以上的銲劑，發泡面高大致在基板厚度一半的位置，而助銲劑不可流入基板表面上。

1-3 Preheating: Surface temperature of the substrate shall be settled within 100℃ in two minutes.
預熱：基板表面溫度 100℃以下，2 分鐘以內。

1-4 Soldering: To be performed in three seconds within 260℃.
銲錫：260℃以下，3 秒以內。

Please use the above process only one or two times.
以上工程 1 回或 2 回通過即可。