版本A. 9/9/2000

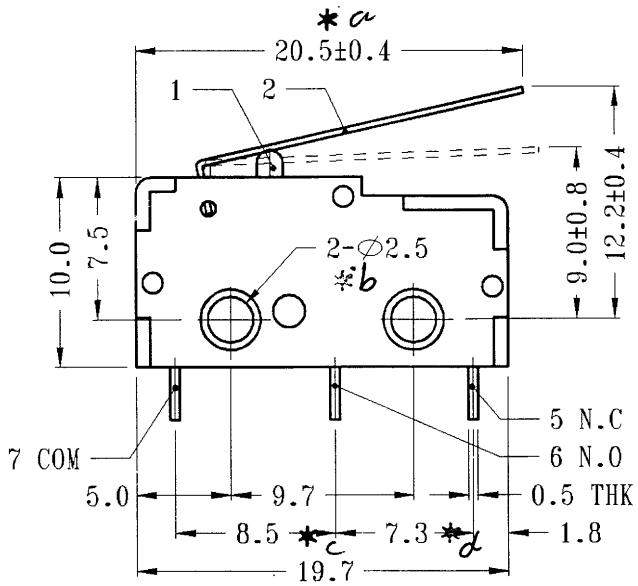

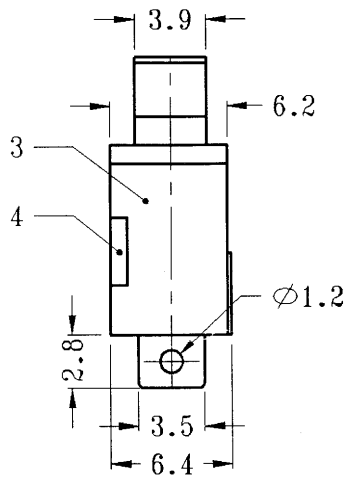

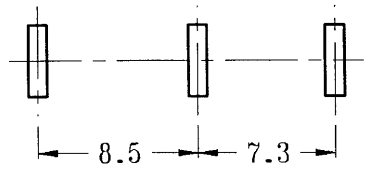

P.C.B LAYOUT

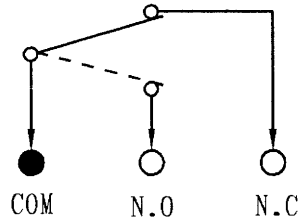

SCHEMATIC

NO.	PART NAME	MATERIAL	QTY.	FINISHING
10	CONTACT	PBS STRIP	1	NATURAL
9	CONTACT	NICKEL SILVER	1	NATURAL
8	SPRING	STAINLESS STEEL	1	TEMPER
7	TERMINAL (COM)	BRASS STRIP	1	Ag PLATED OVER Ni PLATED
6	TERMINAL (N.O)	BRASS STRIP	1	Ag PLATED OVER Ni PLATED
5	TERMINAL (N.C)	BRASS STRIP	1	Ag PLATED OVER Ni PLATED
4	COVER	POM	1	BLACK
3	CASE	POM	1	BLACK
2	STEEL KNOB	STAINLESS STEEL	1	NATURAL
1	KNOB	POM	1	BLACK

WEALTH METAL FACTORY LTD.

TITLE : MICRO SWITCH

NEW MODEL NO :

MODEL : MX-90-C-02

UNIT : M M	DWN.	江運有	25-8-98	GENERAL TOLERANCE
SCALE : 5 : 2	CHK'D	朱付祥	25-8-98	WITHIN 1.5mm±0.1mm
LEVEL 1 REV R1	APPD.	Yau.	26-8-98	OVER 1.5mm±0.2mm