A

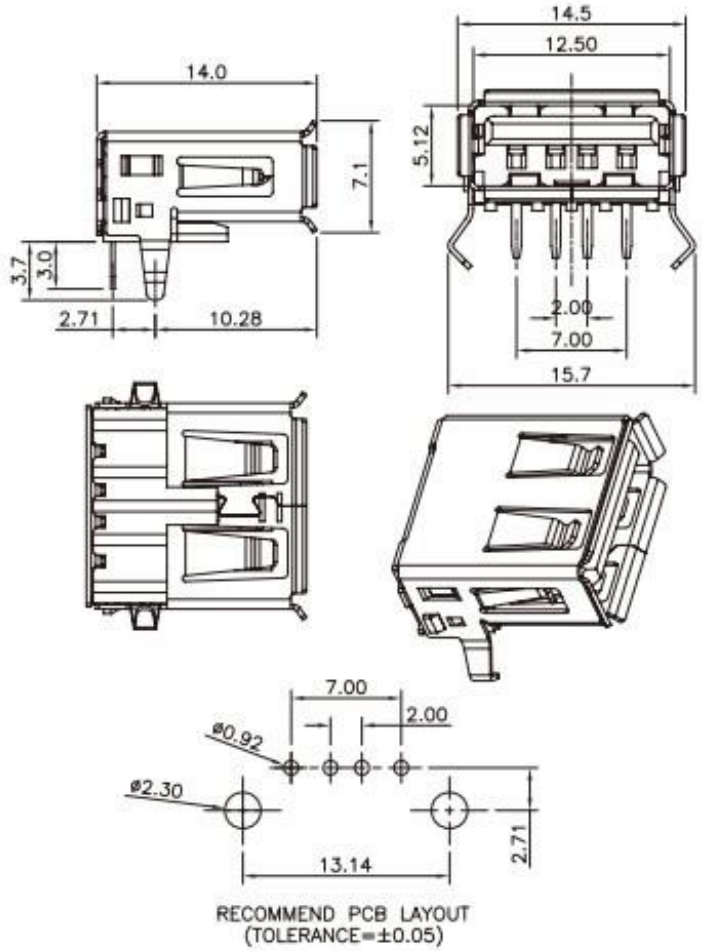
14.0
7.1
3.7
3.0
2.71
10.28
14.5
12.50
5.12
2.00
7.00
15.7
7.00
2.00
ø0.92
ø2.30
2.71
13.14
RECOMMEND PCB LAYOUT
(TOLERANCE=±0.05)