DC-022

Rating:
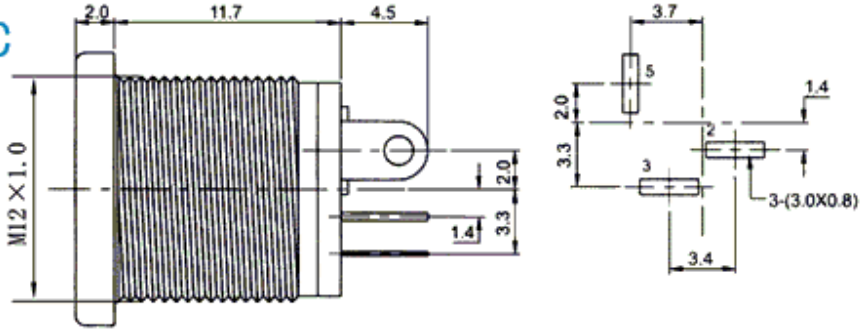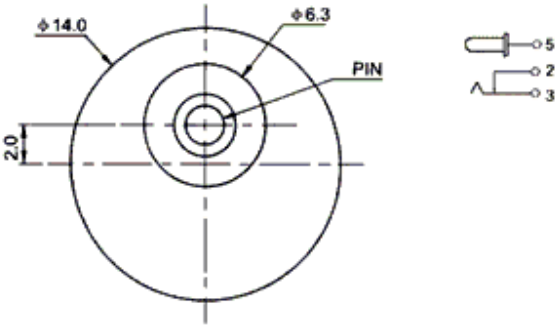
0.5A 50V DC